LEVITASK

Warranty & Assembly Instructions

VISION Y | Folding Armrest

Let's assemble your Vision Y together!

VISION Y WITH FOLDING ARMREST

Knock-down (kd) assembly

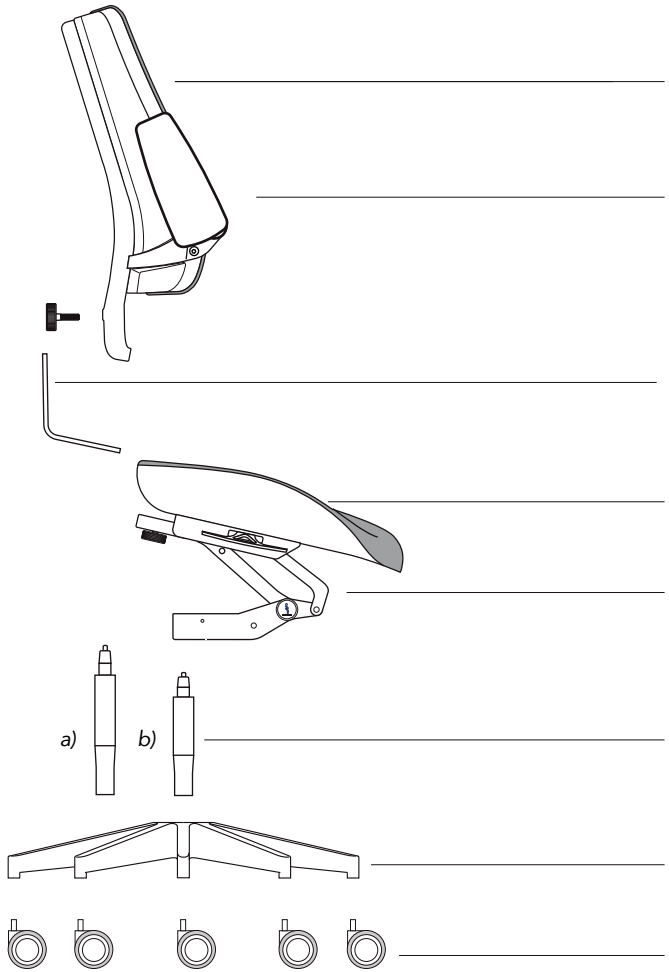

BACKREST

FOLDING ARMREST

J-BAR

SEAT PAN

T-MECH™

STAND PIPES
a) Long
b) Short

FOOTBASE

CASTORS

VISION X CHAIR ASSEMBLY SEQUENCE

No tools required.

STEP 1 - CASTORS

Push castors into the base.

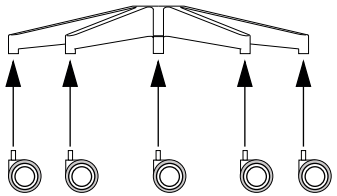

STEP 2 - STAND PIPE

Standpipe Selection Guide

Select the appropriate standpipe based on

a) Long Standpipe	***b) Short Standpipe***
Recommended for:	*Recommended for:*
165 – 195 cm | 5'5" – 6'5"	*145 – 165 cm | 4'9" – 5'5"*

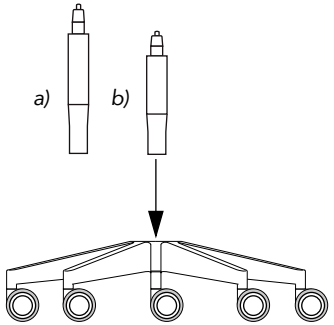

Note: Individual body proportions vary. These recommendations allow for a ±5 cm (±2") margin to accommodate differences in torso and leg length.

STEP 3 - MECHANISM & SEAT PAN

Push mechanism onto top of gas spring.

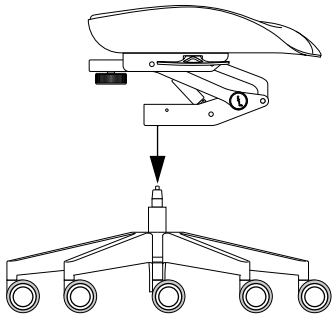

STEP 4 - BACKREST & MECHANISM

4a Unscrew the lock button
4b Push backrest bracket
4c Into backrest spine.

4d Push backrest bracket into slot of mechanism
4e And lock with knob.

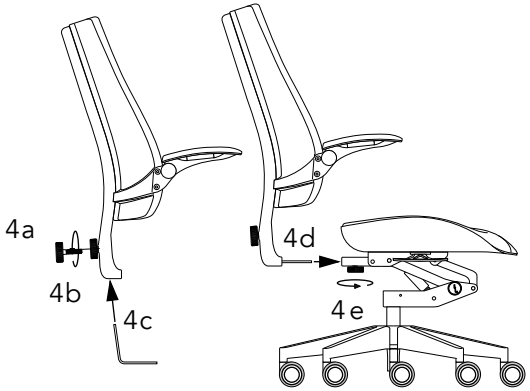

STEP 5 - ELEVATE!

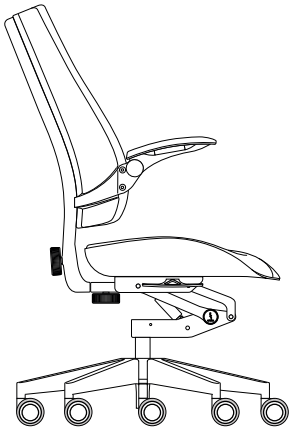

WARRANTY POLICY

Our warranty guarantees that your Vision chair will be free from defects in materials and workmanship under normal use, according to the terms outlined below.

3 Years

Upholstery Warranty

The upholstery, including fabric or leather, is covered for a period of three (3) years from the date of purchase, protecting against tears, color fading, and craftsmanship defects.

Recycled PU Armpads

The PU leather surface of the armpads is covered for a period of three (3) years against craftsmanship defects only. This warranty does not cover cosmetic damage resulting from normal use, such as scratches, scuffs, or indentations.

How to Make a Warranty Claim.

1. **Contact Us:** Reach out to our customer service team at **service@levitask.com** with your proof of purchase and a detailed description of the issue, including pictures.
2. **Evaluation:** Our team will evaluate your claim and determine the appropriate course of action.
3. **Resolution:** If your claim is approved, we will replace the defective part or product in accordance with the terms of this warranty.

10 Years

Casters Warranty

The casters (wheels) are covered for ten (10) years from the date of purchase.

Five-Star Aluminum Base Warranty

The sturdy five-star base of the Vision Y Chair is covered for ten (10) years from the date of purchase.

Shell Warranty

The chair's shell, including the backrest and seat structure, is warranted against defects for ten (10) years from the date of purchase.

Mechanism Lockable Gas-Spring

The mechanism lockable gas-spring, which enables forward tilt, is covered for ten (10) years from the date of purchase.

Mechanism Warranty

The mechanical components of the Vision chair, including tilt mechanisms and adjustment levers, are covered for a period of ten (10) years from the date of purchase.

Standpipe Gas-Spring

The mechanism lockable gas-spring, which enables forward tilt, is covered for ten (10) years from the date of purchase. Date of purchase, protecting against tears, color fading, and craftsmanship defects.

4D | Folding Armrest Mechanism

The mechanical functions of the 4D armrests, including height, depth, pivot, and angle adjustments, are warranted against defects for ten (10) years from the date of purchase.

This Warranty Does Not Cover

To ensure clarity, the following cases are not covered under this warranty:

Normal Wear and Tear – This includes general wear from regular use over time, which can affect the appearance and function of the chair.

Damage Caused by Misuse, Abuse, or Neglect – Any damage resulting from improper use, failure to follow instructions, or intentional harm.

Alterations or Modifications – Damage or defects resulting from any alterations or modifications made to the chair after purchase.

Improper Assembly or Maintenance – Issues arising from incorrect assembly or lack of proper maintenance as outlined in the product manual.

Environmental Factors – Damage caused by environmental conditions such as exposure to extreme temperatures, humidity, or sunlight.

Commercial Use – If the chair is used in a commercial setting, the warranty period and terms may differ.

Third-Party Products – Any additional products or accessories not manufactured by Levitask, even if packaged or sold with the chair.

Transportation Damage – Any damage that occurs during shipping or transport after the initial delivery.

Warranty Terms and Conditions.

This warranty is valid for the original purchaser only and is non-transferable.

The warranty period starts from the date of purchase.

Proof of purchase is required to make a warranty claim.

In the event of a defect, Levitask will, at its discretion, replace the defective part or product.

Dare to Envision